LZ-NH2300N Bracket

Typical mounting on IN-SWINGING door

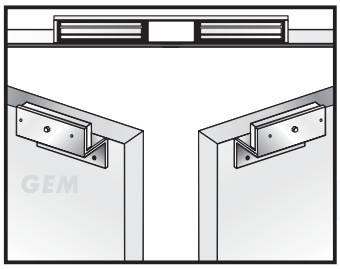

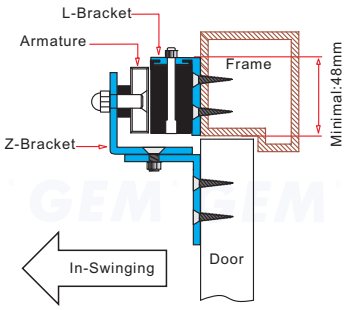

■ Application for the Electromagnet:
EM-NH2300 Series

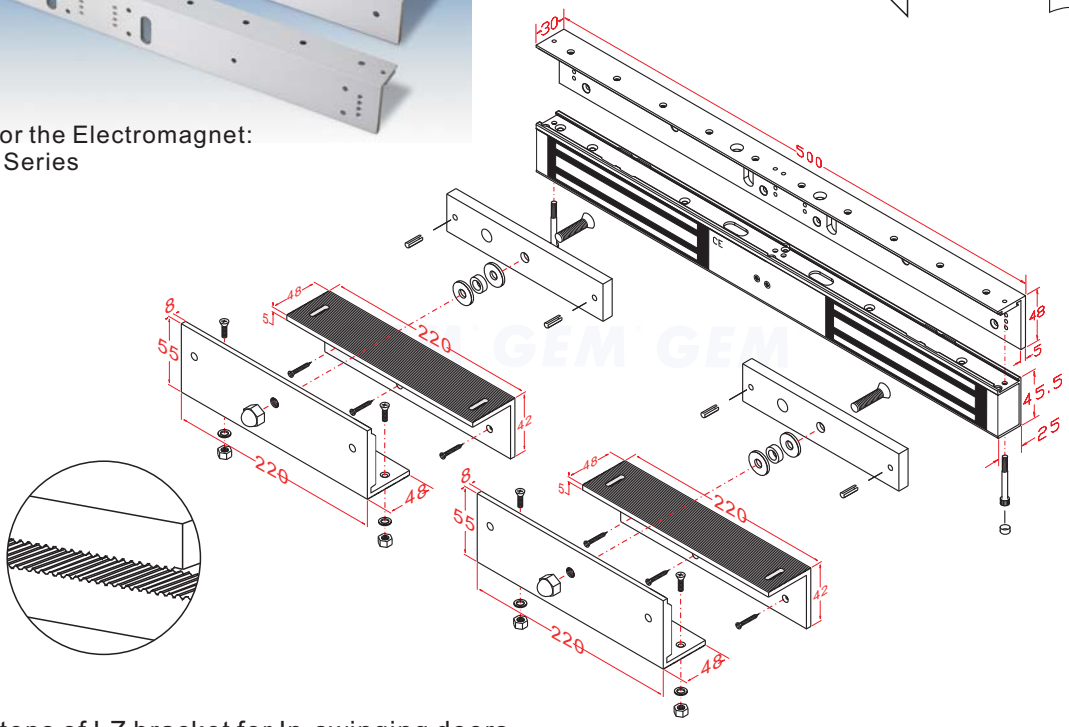

Unit:mm

Installation Steps of LZ bracket for In-swinging doors

1

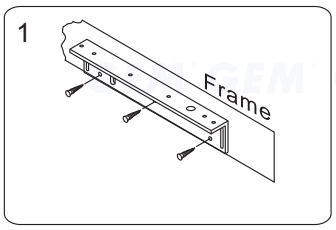

Find a mounting location on the door frame for the L bracket. Make sure that the door is still closeable.

2

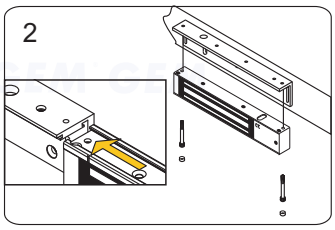

Slide the electromagnetic lock to fit with the mounting plate and tighten the electromagnetic lock on the L bracket.

3

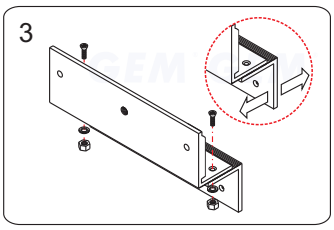

Assemble the Z bracket, and make sure that the Z bracket is adjustable.

4

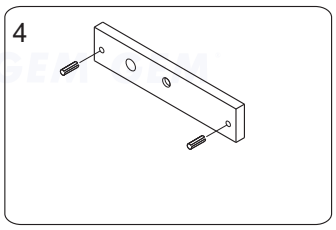

Insert the guide pins into the armature plate.

5

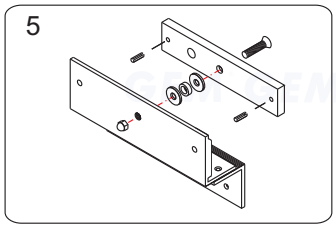

Put one rubber washer between armature plate and the Z bracket.

6

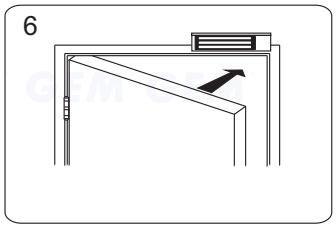

Close the door. Measure the correct position by bringing the armature plate close to the contact surface of the electromagnetic lock.

7

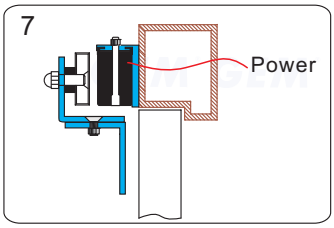

Turn on the power of EM-Lock, and let the armature plate bonds to the EM-lock. Adjust the position between the Z bracket and the door frame.

Finish

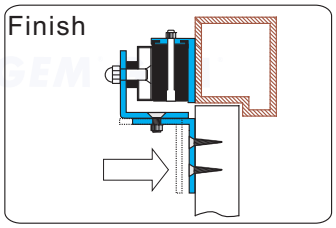

Once the position is correct, use the screws to permanently mount the Z bracket on the door frame. This should be the last step.

GIANNI INDUSTRIES, INC.

No. 13, Zhong Sing Road, Tu-Cheng Industrial Zone,
Tu-Cheng City, Taipei, Taiwan 23678
Tel: 886-2 2267 7986 / Fax: 886-2 2267 9876
E-Mail: info@gianni.com.tw
Website: gianni.tw
Copyright 2008 Gianni industries, inc. All rights reserved.
DM-CA-LZ-NH2300N Ver. A Published on 2008.06.18

The products are manufactured under an ISO 9001 & QC 080000 Certified Quality Management Program environment back its product quality, performance and commitment to customer satisfaction.